10

2019 3

1 4
1.1 4
1.3 5
1.4 6
1.5 6
2 ∑ 8
2.1 8
2.2 12
2.3 13
2.4 15
2.5 23
2.6 24
2.7 31
3 ⅃ 36
3.1 36
3.2 40
3.3 45
3.4 45
3.5 54
3.6 54
3.7 55
3.8 56
3.9 56
3.10 66
3.11 68
4 ⅎ M 71
4.1 71
4.2 80
4.3 90
5 ⅄ ⅎ M 91
5.1 91
5.2 96
5.3 119
6 Ḧ Ǖ ̀l ̃ 129

6.1 129

6.2 130
6.3 131
6.4 131
6.5 132
7 135
7.1 135
7.2 136
7.3 136
7.4 137
7.5 138
8 ↔ 139
8.1 139
8.2 140
8.3 141
8.4 1
8.5 “ ” 4
9 M 6
9.1 6
9.2 7
9.3 7
9.4 12
9.5 14
9.6 14
9.7 14
9.8 14
9.9 14

1

1.1 "

1/10

(“ ”) 66736.22

“ 10

”

20 100800 /

116667 / 14286 /

(2017) (1)

2019 3

“ 10 ”

1.2 ⅄ M ⅈ

1.3 ⅃ ≡ ĩ ‟

(2011)( ) (

21) “

”

1.4 ĩ I ŭ ɹ

(GB162971996) 2

(GB132712014) 3

(GB89781996) 4

(GB123482008)3

1.5 ɹ Ц ë I

100m

1630m

10

2 ∑

2.1 ┼ §

2.1.1

(1) (2014 4 24 2015 1 1)

(2) ( )(2016 7 2 2016 9 1)

(3) (2015 8 29 2016 1 1)

(4) ( )(2017 6 27 2018 1 1)

(5) (1996 10 29 1997 3 1)

(6) (2016)(2016 11 7)

(7) (2016)(2016 7 2)

2.1.2

(1) < > (682 2017 7 16 2017 10 1)

(2) ([2005]39 2005 12 3)

(3) (2011-2020) [2011]119 2011 10 10

(4) ([2011] 35 2011 10 17)

(5) ([2013]37

2013 9 10)

(6) ([2015]17 2015 4 2)

(7) ([2016]31 2016 5 28)

(8) “ ” ([2016]65 2016 11 24)

(9) ([2010]33 2010 5 11)

(10) (2011) ( ) (2013 21 2013 2 16 2013 5 1)

(11) 34 2015 4 16 2015 6 5

(12) (39 2016 6 14 2016 8 1)

(13) (44 2017 6 29 2017 9 1)

(14) < > (1 2018 4 28)

(15) ([2010]113 2010 9 28)

(16) ([2012]77 2012 7 3)

(17) 2013 14 2013 2 27

(18) 2013 59 2013 9 13

(19) ( ) ([2013]103 2013 11 14)

(20) [2013]104 2013 11 15

(21) [2014]197 2014 12 30

(22) < > [2015]4 2015 1 8

(23) < > ([2015]169 2015 12 18)

(24) ([2015]178 2015 12 30)

(25) <“ ” > ([2016]95 2016 7 15)

(26) ([2016]1 50 2016 10 26)

(27) < > (2017 43 2017 8 29)

(28) ([2017]84 2017 11 14)

(29) ([2018]11)

(30) (2010 5 1)

(31) (2016) (2016 12 1)

(32)

([2014]35)

(33) (

[2016]21)

(34) (

[2017]25)

(35) <

> ([2016]126)

(36) (2016) (2016 12

1)

(37)

(38)

(39)

(40) ( ) ([2017]1

)

(41) (

[2015]24)

(42) ([2016] 52)

(43) (

[2017] 39)

(44)

(45) 2014-2017

([2015]58)

(46) 2016

([2016]43)

(47)

2.1.3

(1) · (HJ2.1-2016)

(2) · (HJ2.2-2018)

(3) · (HJ/T2.3-2018)

(4) · (HJ2.4-2009)

(5) · (HJ610-2016)

(6) · (HJ19-2011)

(7) (HJ/T169-2018)

(8) (GB3433-2017)

2.1.4

(1) 10

(2)

(3)

2.2 M ρ Λ ∑

2.2.1

(1) —

(2)

(3)

(4)

(5)

(6)

2.2.2

(1)

(2)

(3)

(4)

(5) “ ” “ ” “ ” “ ”

(6) “ ”

2.3 ⅄ ⌡ Ǚ M ⅄

2.3.1

2-1

2-1 ⅄ ⌡'

		-2D	—	—	-2D	-2C	--
		-2D	—	—	-2D	--	--

2-1 ⌡ ⌡'

		-1C	—	—	-1C	—	—	—
		-1C	—	-2C	-1C	—	—	—

备注：1、表中“+”表示正效益，“-”表示负效益；
2、表中数字表示影响的相对程度，“1”表示影响较小，“2”表示影响中等，“3”表示影响较大；
3、表中“D”表示短期影响，“C”表示长期影响

2-1

2.3.2

2-2

2-2 M ⌡ ⌡'

		PM_{10} SO_2 NO_2 H_2S NH_3
		SO_2 NO_x
		SO_2 NO_x
		COD
		--

2-2 M

		K^+ Na^+ Ca^{2+} Mg^{2+} CO_3^{2-} HCO_3^- Cl^- SO_4^{2-} pH ( )
		L_{eq}
		L_A
		L_{eq}

2.4 M F M

2.4.1

2.4.1.1

(1)P_{max} $D_{10\%}$

. (HJ2.2-2018)

$$P_i = \frac{C_i}{C_{0i}} \times 100\%$$

P_i—— i %

C_i—— i mg/m^3

C_{0i}—— i mg/m^3

SCREEN3 P_i

10% $D_{10\%}$ P_{max}

2-3 2-4 2-5

2-3 ï ' ( )

			(m^3/h)	(m	(m	( )	(m/s)		(kg/h)
1	(1)		18400	15	0.7	20	13.3		0.552
2			2195	15	0.25	40	12.4	SO_2 NO_x	0.044 0.055 0.255
3			5280	10	0.4	160	11.7	SO_2 NO_x	0.06 0.154 0.795

2-4 ï ' ( )

	--		H_2S	NH_3	
	m	8			3
	kg/h	0.13	0.003	0.010	0.05
	m	70			60
	m	130			40
		12			
/	--				

2-5 P_{max} $D_{10\%}$ ü '

		C		P	P_{max}		$D_{10\%}$
	--	mg/m^3	mg/m^3	%	%	m	m
	PM_{10}	0.014	0.45	3.02	9.55	930	--
	PM_{10}	0.0025	0.45	0.57		255	--
	SO_2	0.0032	0.5	0.64			--
	NO_x	0.0149	0.2	7.47			--

2-5 P_{max} $D_{10\%}$

		C_i		P_i	P_{max}		$D_{10\%}$
	--	mg/m³	mg/m³	%	%	m	m
	PM_{10}	0.00143	0.45	0.32	9.55	182	--
	SO_2	0.00374	0.5	0.75			--
	NO_x	0.0190	0.2	9.55			--
	TSP	0.030	0.9	3.34		432	--
	H_2S	0.0007	0.01	6.93			--
	NH_3	0.0023	0.20	1.15			--
	TSP	0.029	0.9	3.31		133	--

(2)

(HJ2.2 - 2018)

2-6

2-6

	P_{max} Ó 1 0 %
	1 % D_{max} 10%
	P_{max} 1%

(3)

2-5

9.55% 10%

2.4.1.2

2.4.1.3

(1)

•

(HJ610-2016) A “ 112

( ) ”

(2)

2-7

2-7 ⅃ غي ⅃

	( )
	( ) ( )

(

)

( )

(

) (

)

“ ”

(3)

· (HJ610-2016)

2-8

2-8 M ɨ ꟻ

(4)

· (HJ610-2016)

2.4.1.4

(GB3096-2008)3

200m •

(HJ/T2.4-2009)

2.4.1.5

(1)

95185.07 142.92

43414.82 42090.84

(2)

•

(HJ19-2011)

(3)

• (HJ19-2011)

2-7

2-7 M ⊬ ⌡ ↔ ⊣ ≡

	( )		
	≥20km² ≥ 100km	2km² 20km² 50km 100km	≤2km² ≤ 50km

• (HJ19-2011)

2.4.1.6

(1)

2-8

2-9

2-8 ⊣ !!'

		LD50 ( ) mg /	LD50 ( ) mg /	LC50 (4) m
	1	5	1	0.01
	2	5 LD50 25	10 LD50 50	0.1 LC50 0.5
	3	25 LD50 200	50 LD50 400	0.5 LC50 2
	1	— ( ) 20		
	2	— 21 20		
	3	— 55 (		

2-9 ˧ ˈ

	-161.5 -188 0.55 15% 4.9% -82.9 58		H_2S (≤20mg/m³)	

2-8 2-9

(2)

(GB18218-2009) 1

(HJ/T169-2004) 3—

2-10

2-10 ˧ Ǔ ˋl ɯ ˈ t

				HJ/T169-2004		GB18218-2009	
1		--	1.43	1	10	50	

注：CNG 撬内天然气压力为 20Mpa，密度为 143.48kg/m³，体积为 10m³，储存量为 1.43t。

2-10

(HJ/T169-2004)

(18218-2009)

(3)

(4)

(HJ/T169-2004)

2-11

2-11 M ɟ ⎭ ↔ ⊣ ≡ '

(5)

2.4.2

“ ”

2-12

2-1

2-12 M ɸ '

1			2.5km 19.6km^2
2			--
3			1km 2km 6km^2
4			200m
5			200m
6			3km

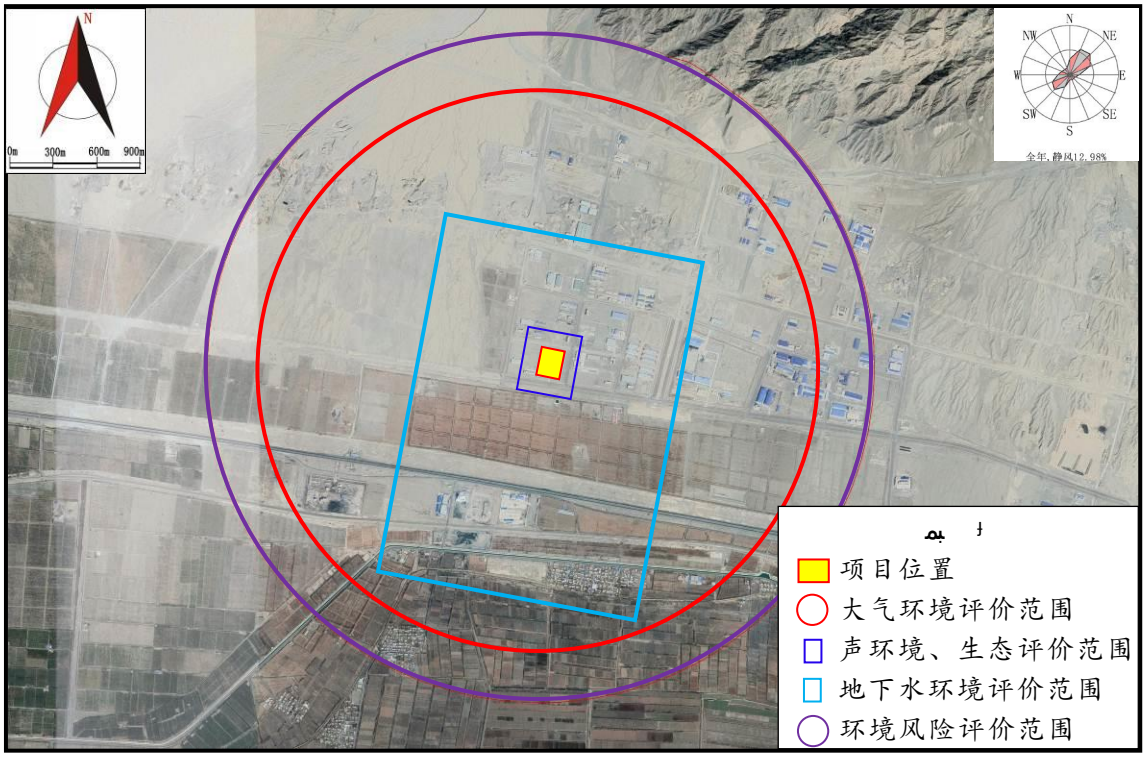

2-1 M

2.5 M`Y F M

2.5.1

2-13

2-13 M `Y

1		
2		
3		( )
4		
5		
6		

2-13 ᴍ `Y

7		“ ”
8		

2.5.2

2.6 ĩ ↔ ŭ ˈ ⅵ ↔

2.6.1

2.6.1.1

140km² 50km² 6.25km²

28.29km² 9.94km² 5.52km²

([534])

6.25km²

2-2 2-3

2.6.1.2

(1)

18 29 44km 3000 m^2 300

10 m^2/d

0.3 0.4MPa

(2)

8 m^3/d

2 m^3/d

(3)

60 85

2 5t/h (1

1)

(4)

O.35MPa

PVC

2.6.2

(GB3095-2012)

(GB3096-2008)3

(GB/T14848-2017)

2.6.3

2-14

2-14 سر ٧ ٬ ↔٬

		1	5 4 -

2-14 سر M ' ↔'

		1	5 4 -

2-14

-

“ ”

“

” “

” “

”

( )

2-2 p U ǩ ⱶ ⱶ ↔ (2011-2030)

2-3 p U, k ⁊ M, k ↔ (2011-2030)

2-4

2.7 м !! ǔ Ḧ

2.7.1

(1)

PM_{10} $PM_{2.5}$ SO_2 NO_2 (GB3095-2012)

NH_3 H_2S (HJ2.2—2018)

D1

(GB/T14848-2017)

(GB3096-2008)3

(2)

(GB16297-1996)

2 NH_3 H_2S (GB14554-93)

2

(GB13271-2014) 3

( ) (GB18483-2001) 2

(GB14554-1993) 1

(GB16297-1996)

2

(GB8978-1996) 4

(GB12348-2008)3

(GB12523-2011)

(3)

(GB18599-2001) (2013 36)

(GB18597-2001)

2-15 2-16

2-15 !!

	PM_{10}	24	150	μg/m³	(GB3095-2012)
	SO_2	24	150		
		1	500		
	NO_2	24	80		
		1	200		
	NH_3		0.20	mg/m³	(HJ2.2—2018) D1
	H_2S		0.01		
	pH	6.5 8.5		—	(GB/T14848-2017)
		≤3.0		mg/L	
		≤1000			
		≤450			
		≤0.50			
	(N)	≤20			
	(N)	≤1.0			
		≤250			
		≤250			
		≤1.0			
		≤0.002			
	( )	≤0.05			
		≤0.001			
		≤0.005			
		≤0.01			
		≤0.01			
		≤0.3			
		≤0.1			
		≤0.05			
		≤1.0			
		≤1.0			

		≤0.0002		

2-15 !!

		≤0.70		mg/L	(GB/T148482017)
		≤0.02			
		≤0.01			
		≤3.0		MPN/100mL	
		≤100		CFU/mL	
	L_{eq}		65	dB(A)	(GB30962008)3
			55		

2-16 !!

			120	mg/m³	(G
			15m 3.5	kg/h	16297-1996) 2
		NH_3	15m 4.9	kg/h	(GB14554-93) 2
		H_2S	15m 0.33	kg/h	
			20	mg/m³	(G
		SO_2	50	mg/m³	
		NO_x	150	mg/m³	13271-2014) 3
			≤1		
			2.0	mg/m³	( )
			60	%	GB18483-2001) 2
			1.5	mg/m³	(GB14554-93) 1
			0.06		
			20		
			1.0	mg/m³	(G 16297-1996) 2
	pH		6 9	mg/L	(GB8978-1996) 4
	SS		400		
	COD		500		

		—		
		100		

2-16 !!

	pH		6 9	mg/L	
	SS		400		
	COD		500		
			40		
	L_{eq}		70	dB(A)	(GB12523-2011)
			55		
	L_{eq}		65	dB(A)	(GB12348-2008)3
			55		

2.7.2

200m

3km

2-17 2-19

2-17 I Ö '

			(m)	( )/ ( )		
		S	1630	52/208	GB30952012	
		SW	2500	48/192		

2-18 غي Γ M Ö '

		(m			(m		

1	6km²	--	--	--	--	--	
2		44		S	1700		GB/T1-2017

2-19 M ¢ `Y " '

			(m*)	( )/ ( )
1		S	1730	52/208
2		SW	2650	48/192

注：*为风险源天然气储罐距村庄最近距离。

3 ⅃

3.1 "

3-1 3-1

3-2

3-1 " '

	1 0
	1630m
	24 2021 3
	66736.22
	100800 / 116667 / 14286 /
	2 ( )
	95185.07 142.92 43414.82 42090.84
	399

	8	340d

3-1 ≤ VI 4

3-2 N

3.2 I Ŭ

3-2 3-3

3-4

3-2

1					
2				6	
3				6	
4				4	
5			JF-- 6	6	
6				18	
7				1	
8			BZY637/6	3	
9			BZY1165/27	3	
10			BF1420B	3	
11			T S P ¢ 2 4	6	
12			L600	6	
			20m3	6	
13					
14					

3-2

1		6m³	6		
1.1			6	304	

1.2			6	304	
1.3		6m³	6		
1.4		6m³	6	304	
2	1# 2#	Φ185	24	316L	200kw/
3		Φ500× 3500mm	12	304	7.5kw
4		Φ500× 6000mm	12	304	7.5kw
5		2100*7225 25 m³	2	306L	
		2100*18529 64m³	1	306L	
6		Q=13L/S; H=120m 10 14%	2	A390 3A	
			2	304	
7		Q=17L/S; H=55m 7 10%	2	316L	
		600*4000	4	304	
8		100ADT/D 10% 14%	2	316L	
9		100ADT/D 10% 14%	2	316L	
10		XMQ 900	2	304	
11		10m³	2		
12		2500*4500 100m³	1	304	
13		80m³	1	304	
14			2	304	37kw
15		4000*4800 50m³	3		
		1000mm	4		
16		4000*4800 50m³	2		
17		4000*4800 20m³	3		
18		4000*4800 20m³	4		
		1000mm	2		

19		4000*4800 20m³	2		
		1000mm	2		
20		4000*4800 10m³	2		
		1000mm	2		
21		HJ100- 65-- 250 50m ³ H=20 5.5Kw	12		
22		SH 6SH-9 270l/s H=32	6		
23	1#		2		
24	2#	4000*4000 50m³	1		
25	1#	Q=60m³/h; H = 35m	1	304	
26	2#	Q=60m³/h; H = 35m	1	304	
27		3-- 5t/H	6		
28		20m²	2		
29		50m³	1	304	
30		Q=130m³/h; H = 35m	2	304	
31		Q= 25 m³/h H=80m	2	304	
32					
33		2m³	2		
34		40m³	2		10
35		2m³	2		1
36		Q=2 H=32	4		2
37		2m³	2		1.5
38		Q=2 H=32	4		2
39		2m³	2		1.5
40		Q=2 H=32	4		2

41					
42					
43					
44		500Nm³/Hr	2		

3-2 I

1		6	1
2		5t/h	3
3			
4			
5			
6			
7			
8			
9		3	1
10			

3-2 I

2			1		90
3			1		20-30mm

4			1		5mm
5			8		
6			1		
7			1		
8			2		
9			1		
10			1		
11			1		
12			6		
13			1		
14			1		
15			1		
16			1		
17			1		
18			1		
19			1		
20			16		
21					
22			1		
23			1		
24			1		
25			1		
26			1		
27			1		

28					
29			1		

3-3 I ɻ '

					1 0 0 %
	1	1 4 2 . 9 2		95185.07	100
				80280.33	
				42918.28	45.05
				1496.54	1.57
	5			43414.82	
	7			42090.84	44.22
	11	[4 /3]		0.84	
	12	[8/3 × 100%]	%	8718.95	9.16

3.3 ˏ ɚ

100800 / 116667 /

14286 /

3-4

t					t				
200000		15% + 45%	120000	× 84%		20000		14000	84%
								4000	
								2000	
						3 0 0 0 0			

						50800	
		35%	70000	÷ 60%		116667	40%
		5%	10000	÷ 70%		14286	30%

3.4 Ŭ

3.4.1

(1)

(300kg/)

20 30mm

20 30mm 5mm

(

) (2

3)

(G1) (G2)

(G3)

1 15m

(N_1) **(N_2)** **(N_3)** **(N_6)**

(S_1) **(S_2)**

(S_3)

(2)

0.8 1.18MPa

145

190 15 25% 0.8 1.18MPa 10min

$6m^3$

10min 48

( )

(G_6) **1** **15m**

(W_1)

(N_4) **(N_6)**

(3)

60 80

30min 20

40 0.1% (1kg)

60min 60%

(40kg/)

20 40 35 60

(G_{10})

(N_5)

(S_4)

3- 3

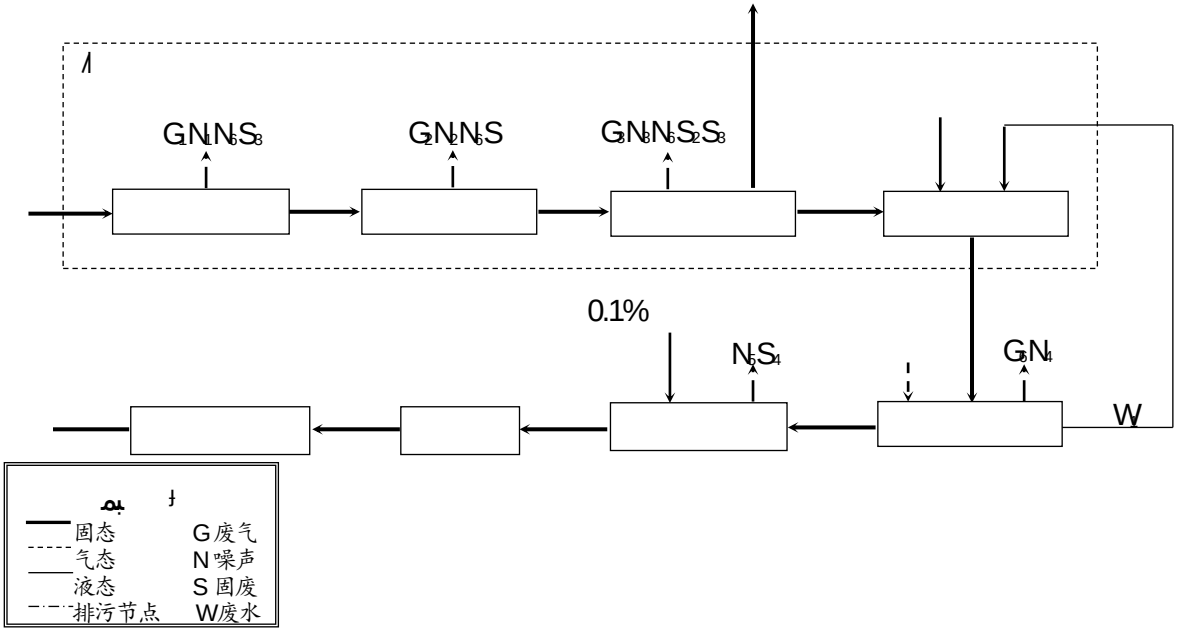

3- 3

3.4.2

(1)

(300kg/)

(20 30mm) (≤ 5mm)

(7 3)

(G_4) (G_5)

1 15m (N_1)

(N_2) (N_6)

(2)

0.8 1.18MPa

145 190 15 25% 0.8 1.18MPa

7 20min

6m^3 10min

10

( )

(G_7) 1 15m

(W_1)

(N_4) (N_6)

(3)

95

95 8 10h

(G_8)

(2) 1 15m

(N_7)

(4)

1 2d

( )

(G_9) (2

) 1 15m

(N_7)

(5)

(30%

)

1695Nm³/h 100

120 30min

30% 20

30

1 15m

1 10m

(G_{10}) (G_{11})

(G_{12}) **1**

1 15m **(2**

) **1 15m**

(N_8) **(N_9)** **(N_{10})**

(6)

(40kg/)

3.4.3

1

2

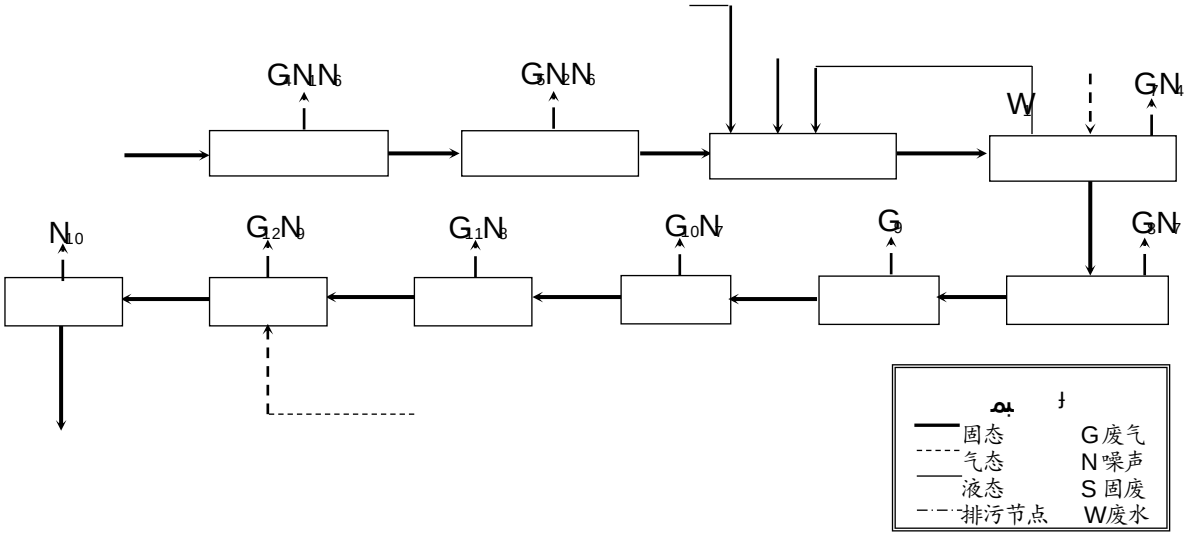

3-4

3-9

		G			1	1	1 15m	
		G			1			
		G			1	1		
					1	1		
					1	1		
		G			1	2		
		G			1	2		
	G			H_2S NH_3	1 15m			
	G			H_2S NH_3	1 15m			
	G			H_2S NH_3	(2)			
	G			H_2S NH_3	1 15m			

3- 9 I '

	G_{12}		SO_2 NO_x H_2S NH_3	(2) 1 15m	
	G_{10}			1 1 15m	
	G_{11}				
	G_{13}		SO_2 NO_x	1 10m	
	G_{14}		H_2S NH_3	--	
	G_{15}				
	G_{16}				
	W_1		SS COD		
	W_2		SS COD		
	W_3		SS COD		
	W_4		SS COD		
	N_1				
	N_2				
	N_3				
	N_4				
	N_5				
	N_6				
	N_7				
	N_8				
	N_9				

3-9 I '

	N_{10}				
	S_1				
	S_2				
	S_3				
	S_4				
	S_5				
	S_6				

3.5 ʌ Ü

3-10

3-11 3-12

3-13

3-10

4 1				
1		t / a	20	
2		t / a	100800	
3		t/a	500	
4		t/a	4	
6		t/a	0.5	
7		t/a	10	
8			1000	
9		kg	1000	
10			100	
11			5	
12			10	

3.6

3-14

3-14 '

t					t				
200000		15% + 45%	120000	× 8 4 %		20000		14000	8 4 %
								4000	
								2000	
						3 0 0 0 0			
						50800			
		35%	70000	÷ 6 0 %		116667			4 0 %
		5%	10000	÷ 7 0 %		14286			3 0 %

3.7 ″

(1)

800KVA 1

286.27 kWh/a

(2)

0.3 0.4MPa

1304380m³/a

(3)

5000Nm³

3963.53 m³/a

(4)

(2MPa 200 230)

2 92t/h

(5)

2 48㎥/d

3.8

122.6㎥/d 106.4㎥/d

16.2㎥/d 13.2%

(1)

㎥/d

㎥/d ㎥/d ㎥/d

㎥/d ㎥/d

㎥/d ㎥/d ㎥/d

㎥/d

(2)

㎥/d ㎥/d ㎥/d

3-5

3-5 ㎥/d

3.9 ǔ ㄓ

3.9.1

(1)

(2)

80 95dB(A)

(3)

(4)

3.9.2

3-15

3-15 I ǚ '

				(m^3/h)		(mg/m^3)			(m)	(mg/m^3)	(kg/h)	(h)	(t/a)
	1						1	1	15				

	2						1						
	3						1	1					
							2	2					
	4						2	4					
	5												
	6						--		15	--	--		--
	7						--		15	--	--		--
	8				H_2S NH_3		2 ( ) 1 1 5 r		15				
	9				H_2S NH_3								
	10				SO_2 NO_x H_2S NH_3								

3-15 I Ü '

			(m^3/h)		(mg/m^3)		(m)	(mg/m^3)	(kg/h)	(h)	(t/a)
	11					1	15				
	12										
	13				SO_2 NO_x			10			

	14		--	H_2S NH_3		--	--				
	15		--		--		--				
	16		2000				--				
			(m^3/d)		(mg/L)		(mg/L)		(t/a)		
	1			SS COD			--		--		
	2			SS COD							
	3			SS COD							
	4			SS COD							

				[dB(A)]		
	1		L_{eq}	95		1 5 d B (A
	2			95		1 5 d B (A
	3			90		1 5 d B (A

3- 15 I Ü '

				[d B (		
	4		L_{eq}	90		15dB(A)
	5			85		1 5 d B (A
	6			90		1 5 d B (A
	7			95		1 5 d B (A
	8			85		1 5 d B (A

	9			85		15dB(A)
	10			90		15dB(A)
			(t/a)			
	1					
	2					
	3					
	4					
	5					
	6					

3.9.2.1

(1)

1

1

2300Nm³/h 3000mg/m³ 99%

30mg/m³ 1 15m

3

3

1 +

2300Nm³/h 3000mg/m³ 99%

30mg/m³ 6900 Nm³/h

1 15m

1 2

4600Nm³/h 3000mg/m³

99% 30mg/m³

1 15m

1 2

4600Nm³/h 3000mg/m³

99% 30mg/m³

1 15m

2300Nm³/h

6900Nm³/h **4600Nm³/h**

4600Nm³/h **18400Nm³/h** **1**

15m **30mg/m³** **0.552kg/h**

(GB16297-1996) 2

(2)

1 15m

(3)

1 15m

(4)

H_2S NH_3

300Nm³/h H_2S 10mg/m³

NH_3 50mg/m^3 200Nm^3/h H_2S 10mg/m^3

NH_3 50mg/m^3 1695 Nm^3/h 40mg/m^3

SO_2 32mg/m^3 NO_x 150mg/m^3 H_2S 10mg/m^3 NH_3 50mg/m^3

(2)

H_2S NH_3 (99%)

20mg/m^3 SO_2 25mg/m^3 NO_x

116mg/m^3 (GB13271-2014) 3

(5)

1

1 2300Nm^3/h

1500mg/m^3 99% 15mg/m^3

1 15m (GB16297-1996)

2

(6)

2 92t/h

1695Nm^3/h 10mg/m^3 SO_2

32mg/m^3 NO_x 150mg/m^3 (GB13271-2014)

3 300d 4h

1200h 0.024t/a SO_2 0.06t/a NO_x

0.305t/a

(7)

H_2S NH_3

H_2S

NH_3

0.13kg/h H_2S 0.005kg/h NH_3

0.010kg/h 2400h 0.312t/a H_2S

0.012t/a NH_3 0.024t/a

(8)

0.05kg/ h

8760h 0.438t/a

(9)

2 2 1

2000 Nm^3/h 95% 2

mg/m^3 ( ) (GB18483-2001) 2

3.9.2.2

1.3m^3/d

0.8m^3/d 0.5m^3/d 2.4m^3/d

SS 400mg/L COD

462mg/L 34.5mg/L 25.9mg/L

(GB8978-1996) 4

3.9.2.3

85 95dB(A)

15dB(A)

3.9.2.4

(0.5 t/a)

(1.545t/a) (10t/a) (119.232t/a) (0.5 t/a)

(9t/a)

(2016) (HW13900-015-13)

3.9.2.5

(HJ610-2016)

3-16

3-17 3-18

3-19

3-16 ┼ ⊣ ĭ

3-17 ~ ⊣ ĭ

	( ) Mb ≥ 1 . 0 m $K \le 1 \times 10^{-6}$ cm/s
	( ) 0 . 5 ≤ Mb 1 . 0 m $K \le 1 \times 10^{-6}$ cm/s ( ) Mb ≥ 1 . 0 m $K \le 1 \times 10^{-4}$ cm/s
	( ) “ ” “ ”

3-18 ⌐ غي ⊣ ⊣ ⊣ ĭ

				Mb ≥ 6

	—			$K \le 1 \times 10^{-7}$cm/s GB18598
		—		Mb ≥5.0m $K \le 1 \times 10^{-7}$cm/s GB18598
	—			
	—			

3-16 “ ”

3-19

3-6

3-19

1					Mb≥ 1.5m K≤1×10^{-7}cm/s
2					

3-6

3.10

“

”

(1)

(2)

(3)

(4)

3.11

SO_2 NO_x

COD NH_3-N

3. 11. 1

3- 20

3- 20 t/a

		SO_2	NO_x		COD	NH_3-N	

3. 11. 2

3.11.2.1

SO_2 NO_x

COD NH_3-N

3. 11.2. 2

<

> ([2014]197) <

> ([2016]126

)

3- 21

3-21 I

		(mg/m³)	(m³/h)	(h/	(t/
	SO_2	50		1200	
	NO_x	150			0.305
		(t/a) = (mg/m³) × (m³/h) × (h/a⁹) /			
		SO_2 0.102 t/a NO_x 0.305 t/a			

SO_2 t/a NO_x t/a COD NH_3-N

4 F M

4.1 "

4.1.1

8 2 ° 3 8 9 3 ° 4 5 3 5 ° 3 3 4 3 ° 2 6

48.27 km²

7116.89km²

8 5 ° 1 2 8 6 ° 2 7 4 1 ° 1 1 4 2 ° 1 4 127km

105km

1630m 2500m

4-1 4-2

和静县
焉耆回族自治县
七个星佛寺遗址
21团场
乃明莫墩
呼尔墩
哈尔莫墩
七个星镇
桑巴巴格次
包尔海
开来提
阿尔莫墩
莫哈尔苏木
永宁镇
上沙河
西大渠
四十里城子镇
阿克敦
新居户
麻扎
巴克来
新渠
夏热勒岱
夏热采开
夏热根布乎
查汗布乎
岱斯提
七个星
老城
3380
1400
1003
0m
3km
6km
9km
N
NE
E
SE
S
SW
W
NW
全年，静风12.98%

4-1 بم r في

8.5 Ḧ Ṇ P n ṇ '

“ ” 8-5

8-5 Ḧ Ṇ P n ṇ '

						( )		( )	
	1			1	1 15m	1	≤ 120mg/m³ ≤ 3.5kg/h	42	(G 16297- 1 9 9 6
	2								
	3			3		3			
	4			4		3			
	5								
	6			1	1 15m	1			
	7			2 +1 15m		1	≤ 20mg/m³ SO_2 ≤ 50mg/m³ NO_x ≤ 150mg/m³	5	(GB13271-2014) 3
	8			10m		1	≤ 20mg/m³ SO_2 ≤ 50mg/m³ NO_x ≤ 150mg/m³	3	(GB13271-2014) 3

8-5 Ḧ Ṇ Ṗ n ṇ ʻ

				( )		( )	
	9		--	--	≤ 1 mg/m³	--	(G 16297-1996
	10			1	≤ 2.0 mg/m³ / ≥ 60%	2	( ) GB1848-3200 1 2
	1			--	--	--	
	2						
	3			1	COD ≤ 500mg/L SS ≤ 400mg/L ≤ 100mg/L	2	(GB8978-1996) 4
	4		+				
	1			--	≤ 65dB(A) ≤ 55dB(A)	--	(GB12348-2008) 3
	1		1.5m 1 × 10^{-7}cm/s	—	1.0 × 10^{-7}cm/s	10	
	2			—		20	
	1		5-26			6	
		-				90	--

9 ㇄ M

9.1 ″

9.1.1

10

100800 /

116667 / 14286 /

2021 3

66736.22 90

2.5%

399 8 340d

9.1.2

1630m 2500m

9.1.3

(2011)( ) (

21) “

”

9.1.4

9.2

9.2.1

PM_{10} SO_2 NO_2

24 (GB3095-2012)

1 (TJ36-79)

(GB/T14848-2017)

42.4 51.8dB(A) 43.5 47.1dB(A)

(GB3096-2008)3

9.2.2

200m

3km

9.3 Ů Ë ˜

9.3.1

(GB/T3840-91)

100m 1630m

9.3.2

9.3.2.1

(1)

1

1

2300Nm³/h 3000mg/m³ 99%

30mg/m³ 1 15m

3

3

1 +

2300Nm³/h 3000mg/m³ 99%

30mg/m³ 6900 Nm³/h

1 15m

1 2

4600Nm³/h 3000mg/m³

99% 30mg/m³

1 15m

1 2

4600Nm³/h 3000mg/m³

99% 30mg/m³

1 15m

2300Nm³/h

6900Nm³/h 4600Nm³/h

4600Nm³/h 18400Nm³/h 1

15m 30mg/m³ 0.552kg/h

(GB16297-1996) 2

(2)

1 15m

(3)

1 15m

(4)

H_2S NH_3

300Nm³/h H_2S 10mg/m³

NH_3 50mg/m³ 200Nm³/h H_2S 10mg/m³

NH_3 50mg/m³ 1695 Nm³/h 40mg/m³

SO_2 32mg/m³ NO_x 150mg/m³ H_2S 10mg/m³ NH_3 50mg/m³

(2)

H_2S NH_3 (99%)

20mg/m^3 SO_2 25mg/m^3 NO_x

116mg/m^3 (GB13271-2014) 3

(5)

1

1 2300Nm^3/h

1500mg/m^3 99% 15mg/m^3

1 15m (GB16297-1996)

2

(6)

2 5t/h (1 1)

1695Nm^3/h 10mg/m^3 SO_2

32mg/m^3 NO_x 150mg/m^3

(GB13271-2014) 3 300d

4h 1200h 0.024t/a SO_2

0.06t/a NO_x 0.305t/a

(7)

H_2S NH_3

H_2S

NH_3

0.13kg/h H_2S 0.005kg/h NH_3

0.010kg/h 2400h 0.312t/a H_2S

0.012t/a NH_3 0.024t/a

(8)

0.05kg/h

8760h 0.438t/a

(9)

2 2 1

2000 Nm^3/h 95% 2

mg/m^3 ( ) (GB18483-2001) 2

9.3.2.2

1.3m^3/d

0.8m^3/d 0.5m^3/d 2.4m^3/d

SS 400mg/L COD

462mg/L 34.5mg/L 25.9mg/L

(GB8978-1996) 4

9.3.2.3

85 95dB(A)

15dB(A)

9.3.2.4

(0.5t/a)

(1.545t/a) (10t/a) (119.232t/a) (0.5t/a)

(9t/a)

(2016) (HW13 900-015-13)

9.4 ㄨ

9.4.1

0.00778 0.01107mg/m^3

(GB1629-71996) 2 (1.0 mg/m^3)

0.00176 0.00198mg/m^3

0.00009 0.00012mg/m^3 (GB1455-493) 1

(1.5mg/m^3 0.06mg/m^3)

(GB/T3840-91)

100m

1630m

9.4.2

(1)

-

( ) 0.68m/d

0.023m/d

(2)

(3)

“ ”

• (HJ610-2016)

(4)

9.4.3

43.2 52.2dB(A)

52.2dB(A)

(GB123482008) 3

9.4.5

(2016) (HW13900-015-13)

9.5 ┼ ⅃

SO_2 0.102t/a NO_x 0.305t/a

COD NH_3-N

9.6 M

(

)

9.7 ˝ Æ ˝ ˝ ƒ ⅃

2019 3

9.8 ˜

10

9.9

(1) “ ”

(2)

(3)